Essentials - 584x | 5844MRSN

Job Name:_____ Job Type:_____ Quantity:_____ Comments:_____

PRODUCT DESCRIPTION

Maxim Lighting's commitment to both the residential lighting and the home building industries will assure you a product line focused on your lighting needs. With Maxim Lighting you will find quality product that is well designed, well priced and readily a

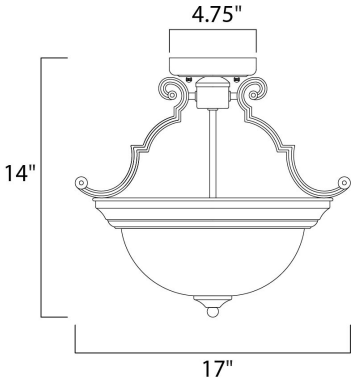

MEASUREMENTS

DIMENSION	: 17" L x 17" W x 14" H
CANOPY	: 4.75" W x 1" H x 4.75" L
HANGING WEIGHT	: 4.6 lb

LAMPING

INPUT VOLTAGE	: 120V
BULB	: 3 x 60W Incandescent E26 Medium , 180W Total
BULB INCLUDED	: (Not Included)
DIMMABLE	: Yes

FINISHES OPTION

Oil Rubbed Bronze (OI)

Satin Nickel (SN)

GLASS

Marble MR

MATERIAL

Glass, Steel

RATINGS

cETLus
Damp Location

ADDITIONAL

OPERATING TEMPERATURE:
-20°C (-4°F), 40°C (104°F)

Always consult a qualified electrician before installing any lighting product.

MAXIM® LIGHTING

WESTERN DISTRIBUTION CENTER (HEADQUARTER)
253 NORTH VINELAND AVE I CITY OF INDUSTRY, CA 91746

EASTERN DISTRIBUTION CENTER
101 GARDNER PARK | PEACHTREE CITY, GA 30269

P. 626.956.4200 I F. 626.956.4225 I maximlighting.com