Vesper | 26035SWSBRBK

Job Name:_____ Job Type:_____ Quantity:_____ Comments:_____







PRODUCT DESCRIPTION

Inspired by both Mid Century Modern and Scandinavian Contemporary this collection spans a large breadth of today's interior design. Straight tubing finished in Satin Brass supports hand blown Satin White cased glass globes. Black accents of metal and Black marble add dramatic detail and upscale appeal.

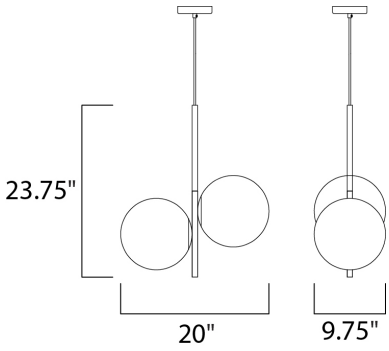

MEASUREMENTS

DIMENSION	: 20" L x 9.75" W x 23.75" H
MAX OAH	: 142" OAH
CANOPY	: 4.72" W x 1" H x 4.72" L
HANGING WEIGHT	: 6.16 lb

LAMPING

INPUT VOLTAGE	: 120V
BULB	: 2 x 60W Incandescent E26 Medium , 120W Total
BULB INCLUDED	: (Not Included)
DIMMABLE	:

FINISHES OPTION

Satin Brass / Black (SBRBK)

GLASS

Satin White SW

MATERIAL

Steel, Opal Glass

RATINGS

cETLus
Dry Location

ADDITIONAL

ADJUSTABLE
SLOPE: 45
OPERATING TEMPERATURE:
-20°C (-4°F), 40°C (104°F)

Always consult a qualified electrician before installing any lighting product.

MAXIM LIGHTING

WESTERN DISTRIBUTION CENTER (HEADQUARTER)
253 NORTH VINELAND AVE I CITY OF INDUSTRY, CA 91746

EASTERN DISTRIBUTION CENTER
101 GARDNER PARK | PEACHTREE CITY, GA 30269

P. 626.956.4200 I F. 626.956.4225 I maximlighting.com